Diritti riservati All rights reserved

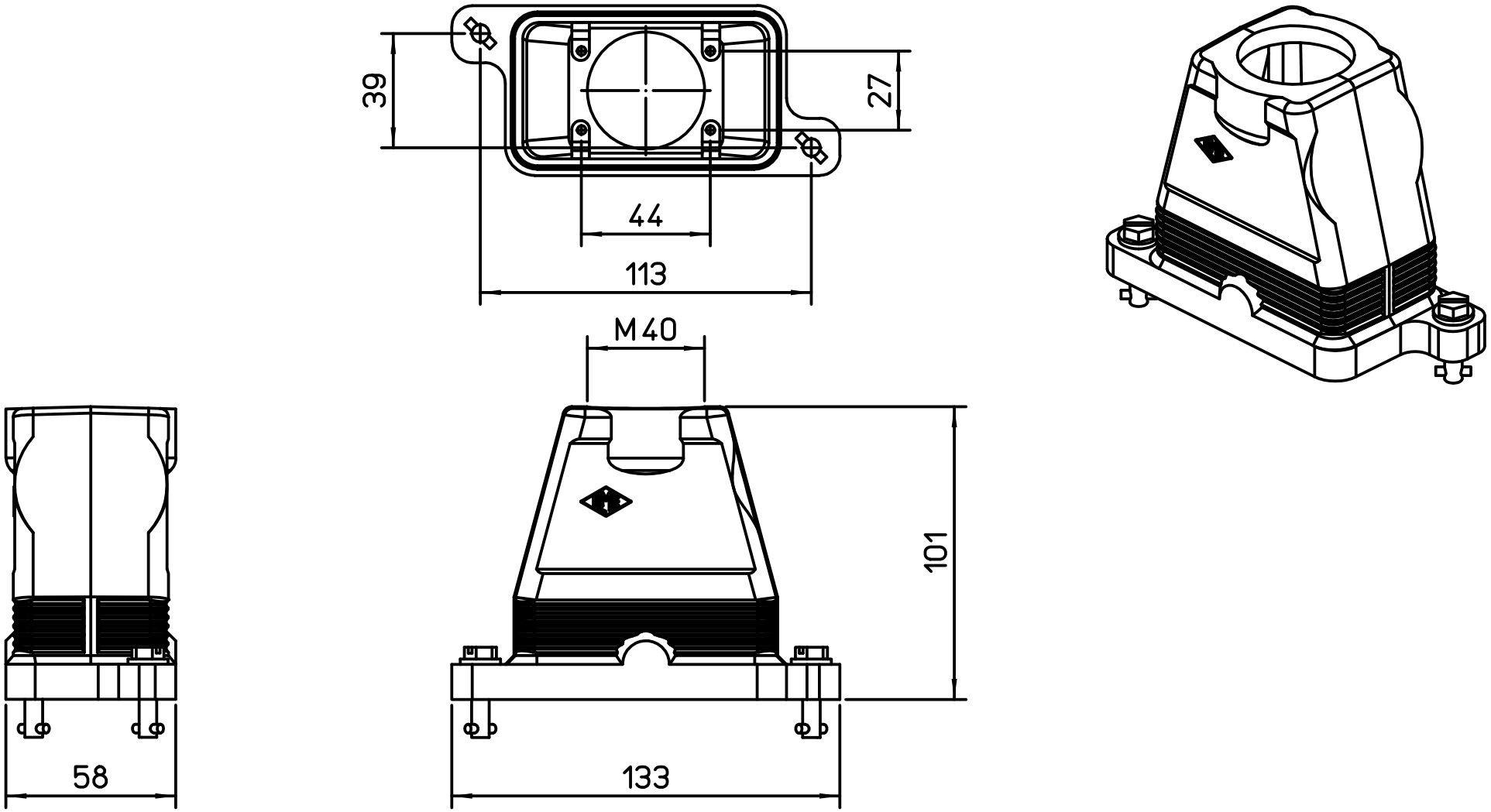

dimensions in mm	MGV 06.40 B	Scale
Date 21/12/17	Hood, top entry M40 with bayonet IP68	1:2
Sign. D.Cominelli		